ISSN 2229-5518

Hand Written Characters & Gesture Recognition using PSOC

S.V. Chidambaram
PG Student
Dept of Electronics & Communication Engineering
Tagore Engineering College, Chennai
India
svchidambaram88@gmail.com

K. Prabakaran
Assistant Professor
Dept of Electronics & Communication Engineering
Tagore Engineering College, Chennai
India
prabakaran36@gmail.com

Abstract - Nowadays, the growth of miniaturization technologies in electronic circuits and components has greatly decreased the dimension and weight of consumer electronic products, such as smart phones and handheld computers, and thus made them more handy and convenient. This paper presents an accelerometer-based digital pen for handwritten digit and gesture trajectory recognition applications. The digital pen consists of a tri-axial accelerometer, a microcontroller, and a Zigbee wireless transmission module for sensing and collecting accelerations of handwriting and gesture trajectories. Using this project we can do human computer interaction. Users can use the pen to write digits or make hand gestures, and the accelerations of hand motions measured by the accelerometer are wirelessly transmitted to a computer for online trajectory recognition. So, by changing the position of mems (Micro Electro Mechanical Systems) we can able to show the alphabetical characters in the PC. The acceleration signals measured from the tri-axial accelerometer are transmitted to a computer via the wireless module.

Index Terms- ARM, Digital Pen, Sensors Module, Tri-axial Accelerometer, MEMS, Wireless Module, Zigbee

1 INTRODUCTION

The development of reconfigurable technology and System-On-Chip (SoC) technology, new concepts and methodologies such as Programmable System-On-Chip (PSOC), system-level design, and hardware/software co-design have been brought to microelectronic system design. In order to keep up with the rapid changes in technology, many universities around the world have initiated new courses or updated their existing curricula for microelectronic system design education. Most of these courses usually pay more attention to digital system design than to analog or mixed-signal system design. As the natural world is analog, it follows that a lot of systems are analog or mixed-signal systems. Examples include automobile control and measurement systems such as automotive power steering; medical treatment equipment such as electrocardiography, industrial temperature or flow measurement and control system, Computerized Numerical Control (CNC) controllers; and consumer electronic devices such as air conditioners. With its rapid economic development, China needs numerous electronic system engineers for its modernization of traditional industries, as well as the aerospace, automobile, and medical industries, among others. Therefore, students and engineers must be skilled not only in the field of digital electronics, but also in that of analog or mixed-signal electronic circuit and system analysis and design. This paper describes PSoC-based courses focused on training student's capabilities in mixed-signal embedded system design and in innovative design.

Pen section:

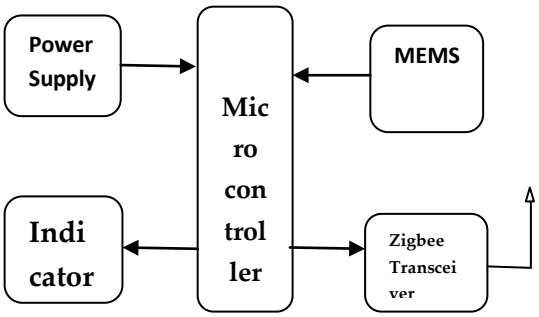

Pc Section:

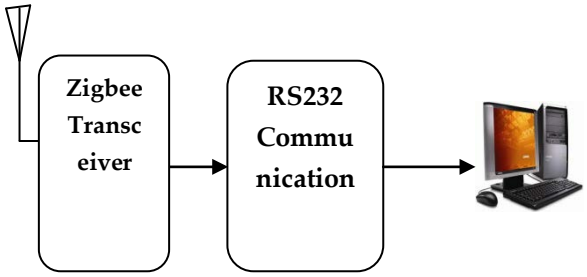

II. Micro Controller (ARM7) FAMILY

The ARM7 family includes the ARM7TDMI, ARM7TDMI-S, ARM720T, and ARM7EJ-S processors. The ARM7TDMI core is the industry's most widely used 32-bit embedded RISC microprocessor solution. Optimized for cost and power-sensitive applications, the ARM7TDMI solution provides the low power consumption, small size, and high performance needed in portable, embedded applications.

The ARM7TDMI-S core is the synthesizable version of the ARM7TDMI core, available in both VERILOG and VHDL, ready for compilation into processes supported by in-house or commercially available synthesis libraries. Optimized for flexibility and featuring an identical feature set to the hard macro cell, it improves time-to-market by reducing development time while allowing for increased design flexibility, and enabling >>98% fault coverage. The ARM720T hard macro cell contains the ARM7TDMI core, 8kb unified cache, and a Memory Management Unit (MMU) that allows the use of protected execution spaces and virtual memory. This macro cell is compatible with leading operating systems including Windows CE, Linux, palm OS, and SYMBIAN OS.

The ARM7EJ-S processor is a synthesizable core that provides all the benefits of the ARM7TDMI – low power consumption, small size, and the thumb instruction set – while also incorporating ARM's latest DSP extensions and Jazelle technology, enabling acceleration of java-based applications. Compatible with the ARM9™, ARM9E™, and ARM10™ families, and Strong-Arm® architecture software written for the ARM7TDMI processor is 100% binary-compatible with other members of the ARM7 family and forwards-compatible with the ARM9, ARM9E, and ARM10 families, as well as products in Intel's Strong ARM and xscale architectures. This gives designers a choice of software-compatible processors with strong price-performance points. Support for the ARM architecture today includes:

- Operating systems such as Windows CE, Linux, palm OS and SYMBIAN OS
- More than 40 real-time operating systems, including qnx, wind river's vx works

B) LPC2148 MICROCONTROLLER

LPC2148 Microcontroller Architecture. The ARM7TDMI-S is a general purpose 32-bit microprocessor, which offers high performance and very low power consumption. The ARM architecture is based on Reduced Instruction Set Computer (RISC) principles, and the instruction set and related decode mechanism are much simpler than those of micro programmed Complex Instruction Set Computers (CISC). This simplicity results in a high instruction throughput and impressive real-time interrupt response from a small and cost-effective processor core.

Pipeline techniques are employed so that all parts of the processing and memory systems can operate continuously. Typically, while one instruction is being executed, its successor is being decoded, and a third instruction is being fetched from memory. The ARM7TDMI-S processor also employs a unique architectural strategy known as Thumb, which makes it ideally suited to high-volume applications with memory restrictions, or applications where code density is an issue.

The key idea behind Thumb is that of a super-reduced instruction set. Essentially, the ARM7TDMI-S processor has two instruction sets:

- The standard 32-bit ARM set.
- A 16-bit Thumb set.

The Thumb set's 16-bit instruction length allows it to approach twice the density of

ISSN 2229-5518

standard ARM code while retaining most of the ARM's performance advantage over a traditional 16-bit processor using 16-bit registers. This is possible because Thumb code operates on the same 32-bit register set as ARM code. Thumb code is able to provide up to 65 % of the code size of ARM, and 160 % of the performance of an equivalent ARM processor connected to a 16-bit memory system

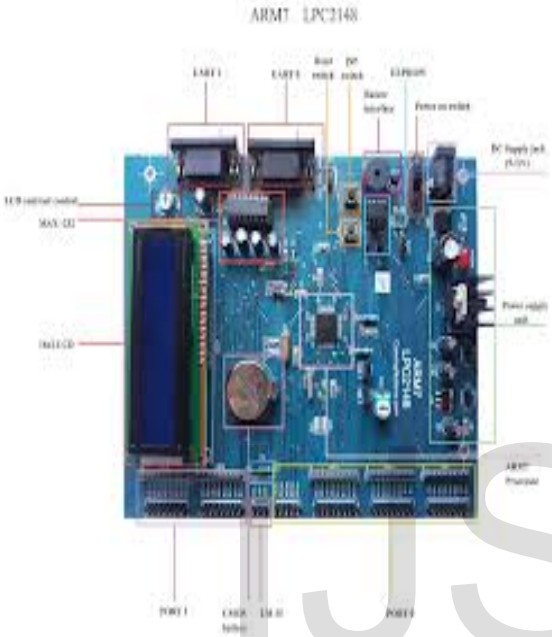

III. MEMS Technology:

Micro-Electro-Mechanical Systems (MEMS) is the integration of mechanical elements, sensors, actuators, and electronics on a common silicon substrate through micro fabrication technology MEMS is an enabling technology allowing the development of smart products, augmenting the computational ability of microelectronics In most cases, the physics behind the behavior of MEMS devices can be expressed by mathematical expressions. MEMSolver works by creating a mathematical model of the system and generates analytical solutions to explain the behavior of the MEMS device. The user just has to enter the input parameters like length and width of the beam for example in a user friendly GUI, and the software will immediately calculate the relevant results and plot graphs that fully explain the MEMS device or part of it.

The software is divided into five modules namely mechanics, sensing, actuation, and process and data analysis. Mechanics module is subdivided into three sub sections. The first sub section being structures where the most commonly used beams and diaphragm designs are examined. The second subsection discusses vibration of these structures, both free and forced vibrations. The third subsection discusses damping in the form of squeeze film and slide film damping. Sensing module discusses sensing schemes widely used in MEMS namely piezo resistive and capacitive sensing for designing pressure sensors and accelerometers. Actuation module examines the two widely used means of actuation namely electrostatic and thermal applied to some commonly used actuators like parallel plate, micro mirror, comb drive, bimetallic and bimorph actuators. Process module is divided into six subsections namely lithography, oxidation, diffusion, implantation, film deposition and wet etching. This covers some of the most commonly used processes used in the development of MEMS devices. The data analysis module has a die calculator, unit conversion tool and lists the material properties of commonly used MEMS materials

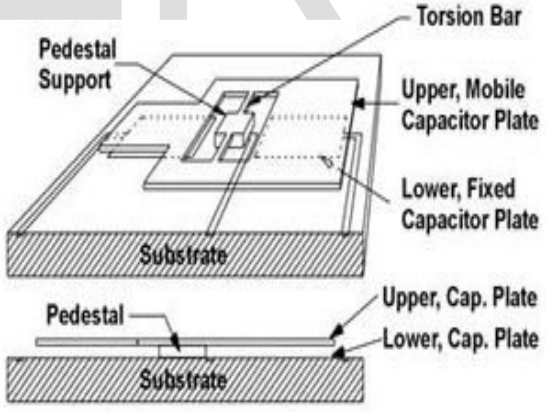

The increasing demand for MEMS (micro-electromechanical systems) technology is coming from diverse industries such as automotive, space and consumer electronics. MEMS promises to revolutionize nearly every product category by bringing together silicon-based microelectronics with micromachining technology, making possible the realization of complete systems-on-a-chip. KLA-Tenor offers the tools and techniques, first

ISSN 2229-5518

developed for the integrated circuit industry, for this emerging market.

MEMS AND COMPLIANT MEMS

Micro-electro-mechanical systems (MEMS) technology has contributed to the improved performance, reliability and lower-cost sensors that support basic automobile functions within the automotive industry. MEMS technology is expected to play an important role in the future of Research and Development of automotive industry [4]; particularly in the active safety area. MEMS sensors have the following advantages: they are deterioration-free and are durable for long periods; they have good dynamic characteristics, superior impact resistance, low power consumption, low cost, they are small in size, and easy for installation. MEMS are considered to be as a key technology with potential to meet the requirements of the Intelligent Transportation Technology (ITS). MEMS sensors used in automotive systems etc. usually comprise micro beams and inertial mass formed by etching part of a silicon substrate, and piezo-resistors formed as strain gauges on the beams. Applications of MEMS sensors are not limited to airbag systems. They are also used in vehicle motion control systems, for example in the Antilock Braking System (ABS). Crash sensors can detect and calculate crash parameters such as velocity and acceleration. Existing technologies for active safety are being modified using MEMS sensors to enhance the performance of current systems; such as airbags or belt pre-tension devices. These systems reduce the risk of injury and its level during a crash which motivates the development of Intelligent Safety Systems (ISS). In this research two compliant MEMS designs are introduced as shown in Figures 1-2. These mechanisms work on the principle of large deflecting arcs and the beams and achieve motion by the deflection of their members. Prescribed motion profiles can be obtained more easily using buckling members in compliant mechanism design [5]. If these mechanism's members were rigid the mechanism would have zero degree of freedom.

IV. TRAJECTORY ALGORITHM

A **trajectory** is the path that a moving object follows through space as a function of time.

A trajectory is a sequence $(f^k(x))_{k\in\mathbb{N}}$ of values calculated by the iterated application of a mapping f to an element x of its source.

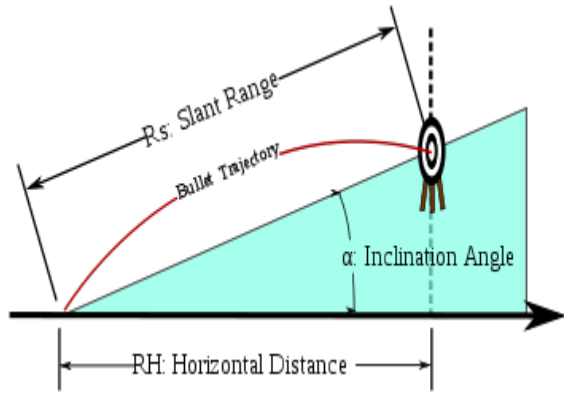

Illustration showing the trajectory of a bullet fired at an uphill target.

Physics of trajectories

Consider a particle of mass m, moving in a potential field V. Physically speaking mass represents inertia, and the field V represents external forces, of a particular kind known as "conservative". That is, given V at every relevant position, there is a way to infer the associated force that would act at that position, say from gravity. Not all forces can be expressed in this way, however.

The motion of the particle is described by the second-order differential equation

$$m\frac{\mathrm{d}^2\vec{x}(t)}{\mathrm{d}t^2} = -\nabla V(\vec{x}(t))$$

with $\vec{x} = (x, y, z)$

Uniform gravity, no drag or wind

Let g be the acceleration. Relative to the flat terrain let the initial horizontal speed be $v_h = v\cos(\theta)$ and the initial vertical speed is $v_v = v\sin(\theta)$. It will also be shown

that, the range is $2v_h v_v / g$, and the maximum altitude is $v_v^2/2g$; the maximum range, for a given initial speed v, is obtained when $v_h = v_v$, i.e. the initial angle is 45 degrees. This range is v^2/g, and the maximum altitude at the maximum range is a quarter of that.

Derivation of the equation of motion

Assume the motion of the projectile is being measured from a Free fall frame which happens to be at (x, y) = (0, 0) at t=0. The equation of motion of the projectile in this frame (by the principle of equivalence) would be $y = x\tan(\theta)$. The co-ordinates of this free-fall frame, with respect to our inertial frame would be $y = -gt^2/2$. That is, $y = -g(x/v_h)^2/2$.

Now translating back to the inertial frame the co-ordinates of the projectile becomes $y = x\tan(\theta) - g(x/v_h)^2/2$
That is:

$$y = -\frac{g\sec^2\theta}{2v_0^2}x^2 + x\tan\theta$$

(where v_0 is the initial velocity, θ is the angle of elevation, and g is the acceleration due to gravity).

Range and height [edit]

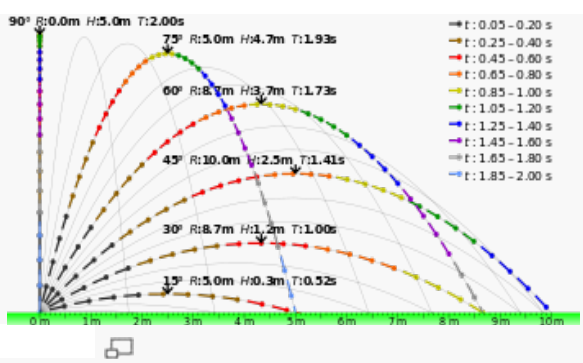

Trajectories of projectiles launched at different elevation angles but the same speed of 10 m/s in a vacuum and uniform downward gravity field of 10 m/s². Points are at 0.05 s intervals and length of their tails is linearly proportional to their speed. t = time from launch, T = time of flight, R = range and H = highest point of trajectory (indicated with arrows).

The range, R, is the greatest distance the object travels along thex-axis in the I sector. The initial velocity, v_i, is the speed at which said object is launched from the point of origin. The initial angle,θ_i, is the angle at which said object is released. The g is the respective gravitational pull on the object within a null-medium.

$$R = \frac{v_i^2 \sin 2\theta_i}{g}$$

The height, h, is the greatest parabolicheight said object reaches within its trajectory

$$h = \frac{v_i^2 \sin^2\theta_i}{2g}$$

V. WIRELESS COMMUNICATION

Zigbee module:

The XBee/XBee-PRO RF Modules are designed to operate within the ZigBee protocol and support the unique needs of low-cost, low-power wireless sensor networks. The modules require minimal power and provide reliable delivery of data between remote devices. The modules operate within the ISM 2.4 GHz frequency band and are compatible with the following:

- XBee RS-232 Adapter
- XBee RS-232 PH (Power Harvester) adapter
- XBee RS-485 Adapter
- XBee Analog I/O Adapter
- XBee Digital I/O Adapter
- XBee Sensor Adapter
- XBee USB Adapter
- XStick
- Connect Port X Gateways
- XBee Wall Router.

The XBee/XBee-PRO ZB firmware release can be installed on XBee modules. This firmware is compatible with the ZigBee 2007 specification, while the ZNet 2.5 firmware is based on Ember's proprietary "designed for ZigBee" mesh stack

(EmberZNet 2.5). ZB and ZNet 2.5 firmware are similar in nature, but not over-the-air compatible. Devices running ZNet 2.5 firmware cannot talk to devices running the ZB firmware.

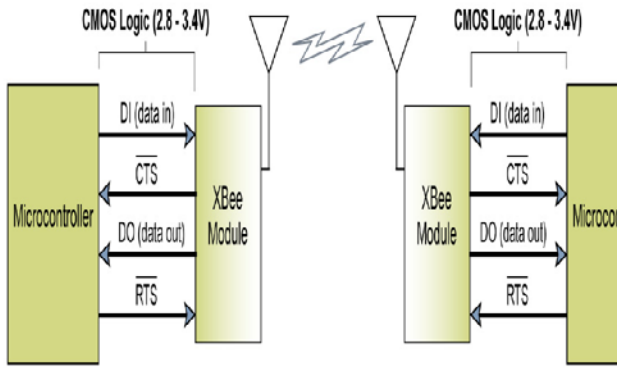

VIII. Conclusion

This paper presents an accelerometer-based digital pen for handwritten digit and gesture trajectory recognition applications. The digital pen consists of a triaxial accelerometer, a microcontroller, and an Zigbee wireless transmission module for sensing and collecting accelerations of handwriting and gesture trajectories.Using this project we can do human computer interaction.

IX. References

[1] E. Sato, T. Yamaguchi, and F. Harashima, "Natural interface using pointing behavior for human–robot gestural interaction," *IEEE Trans. Ind. Electron.*, vol. 54, no. 2, pp. 1105–1112, Apr. 2007.

[2] Y. S. Kim, B. S. Soh, and S.-G. Lee, "A new wearable input device: SCURRY," *IEEE Trans. Ind. Electron.*, vol. 52, no. 6, pp. 1490–1499, Dec. 2005.

[3] A. D. Cheok, Y. Qiu, K. Xu, and K. G. Kumar, "Combined wireless hardware and real-time computer vision interface for tangible mixed reality," *IEEE Trans. Ind. Electron.*, vol. 54, no. 4, pp. 2174–2189, Aug. 2007.

[4] Z. Dong, U. C. Wejinya, and W. J. Li, "An optical-tracking calibration method for MEMS-based digital writing instrument," *IEEE Sens. J.*, vol. 10, no. 10, pp. 1543–1551, Oct. 2010.

[5] J. S.Wang, Y. L. Hsu, and J. N. Liu, "An inertial-measurement-unit-based pen with a trajectory reconstruction algorithm and its applications," *IEEE Trans. Ind. Electron.*, vol. 57, no. 10, pp. 3508–3521, Oct. 2010.

[6] S.-H. P. Won, W. W. Melek, and F. Golnaraghi, "A Kalman/particle filter-based position and orientation estimation method using a position sensor/inertial measurement unit hybrid system," *IEEE Trans. Ind. Electron.*, vol. 57, no. 5, pp. 1787–1798, May 2010.

[7] S.-H. P. Won, F. Golnaraghi, and W. W. Melek, "A fastening tool tracking system using an IMUand a position sensor with Kalman filters and a fuzzy expert system," *IEEE Trans. Ind. Electron.*, vol. 56, no. 5, pp. 1782–1792, May 2009.

[8] Y. S. Suh, "Attitude estimation by multiple-mode Kalman filters," *IEEE Trans. Ind. Electron.*, vol. 53, no. 4, pp. 1386–1389, Jun. 2006.

[9] J. Yang, W. Chang, W. C. Bang, E. S. Choi, K. H. Kang, S. J. Cho, and D. Y. Kim, "Analysis and compensation of errors in the input device based on inertial sensors," in *Proc. IEEE Int. Conf. Inf. Technol.—Coding and Computing*, 2004, pp. 790–796.

[10] Y. Luo, C. C. Tsang, G. Zhang, Z. Dong, G. Shi, S. Y. Kwok, W. J. Li, P. H. W. Leong, and M. Y. Wong, "An attitude compensation technique for a MEMS motion sensor based digital writing instrument," in *Proc. IEEE Int. Conf. Nano/Micro Eng. Mol. Syst.*, 2006, pp. 909–914.

[11] Z. Dong, G. Zhang, Y. Luo, C. C. Tsang, G. Shi, S. Y. Kwok, W. J. Li, P. H. W. Leong, and M. Y. Wong, "A calibration method for MEMS inertial sensors based on optical tracking," in *Proc. IEEE Int. Conf. Nano/Micro Eng. Mol. Syst.*, 2007, pp. 542–547.

[12] J. G. Lim, S. Y. Kim, and D. S. Kwon, "Pattern recognition-based realtime end point detection specialized for accelerometer signal," in *Proc.*

IEEE/ASME Int. Conf. Adv. Intell. Mechatron., 2009, pp. 203–208.

[13] S. D. Choi, A. S. Lee, and S. Y. Lee, "On-line handwritten character recognition with 3D accelerometer," in *Proc. IEEE Int. Conf. Inf. Acquisition*, 2006, pp. 845–850.

[14] N. C. Krishnan, C. Juillard, D. Colbry, and S. Panchanathan, "Recognition of hand movements using wearable accelerometers," *J. Ambient Intell. Smart Environ.*, vol. 1, no. 2, pp. 143–155, Apr. 2009.